Stremnev A. Y.
2017

THEME № 2

GRINDING EQUIPMENT

Summary

The purpose of grinding equipment. Construction of rotary crusher. Basic parameters of rotary crusher. Construction of roller crusher. Basic parameters of roller crusher. Construction of ball mill. Basic parameters of ball mill.

Theory

Grinding is one of the main technological processes in the field of production of any construction materials. Equipment for grinding is rather various in designs but any of them uses at least one of the basic principles. According to them material can be crushed by compression, impact, splitting, fracture or abrasion.

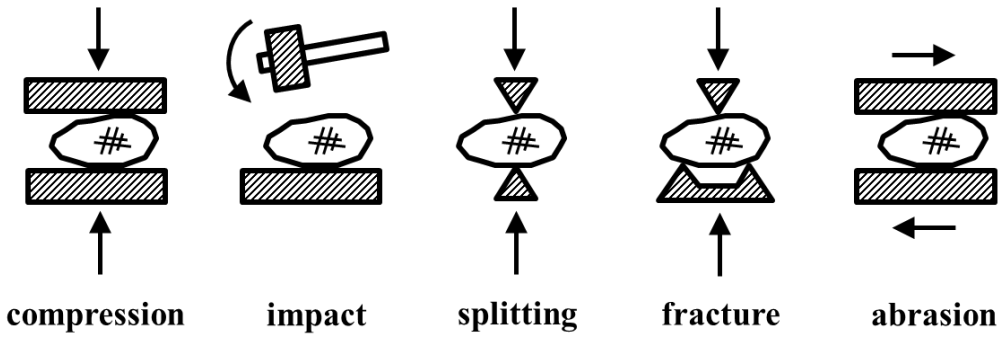

Rotary crusher

Rotary crusher is designed (suitable) for grinding clay and other materials with not high hardness. Grinding is based on high number of impacts which take place between material and rotary elements of machine.

This crusher consists of several elements. Let's describe them a little.

The BASE (pos. 1) includes the main part called ROTOR (pos. 4) mounted in BEARING UNIT (pos. 13).

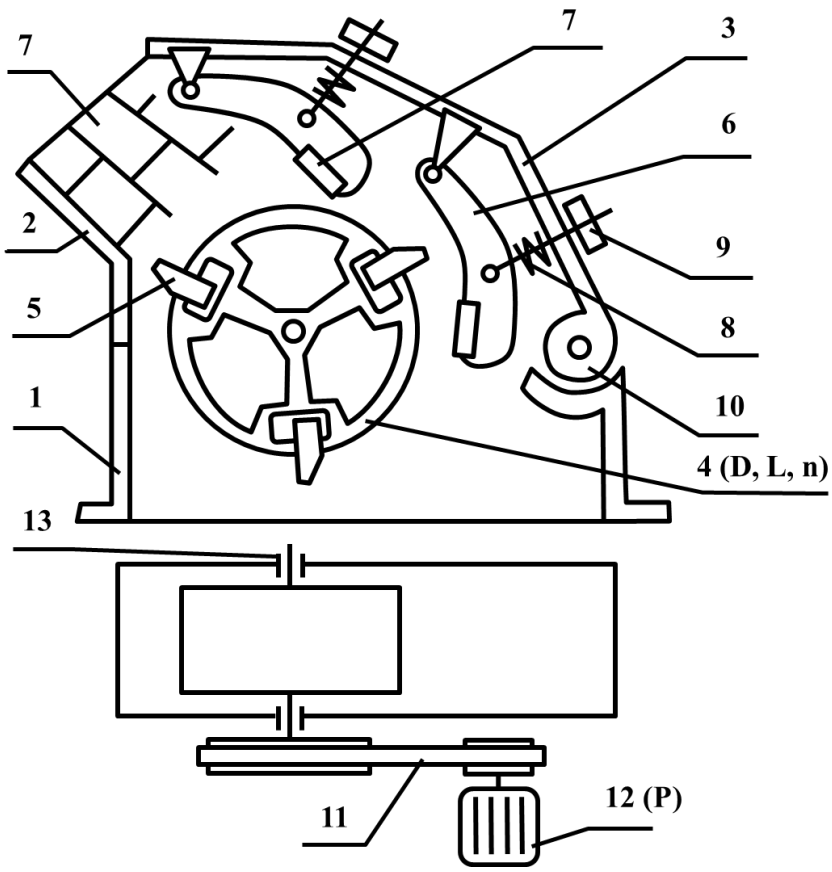

The next elements are separated FRONT SIDE (pos. 2) and BACK SIDE PARTS (pos. 3). Back side connected with base by the PIVOT (swivel, hinge) unit (pos. 10). This unit is necessary for repairing of rotary crusher.

The system of several BEATERS (pos. 5) connected with rotor by the wedges. BEATERS crush the pieces of material by impacts during the rotor rotation.

Several REFLECTIVE ADJUSTING PLATES (pos. 6) mounted inside the rotary crusher. To prevent the destroying they include WEAR-RESISTANT (ABRASION-RESISTANT) SEGMENTS (pos. 7). Beaters and high endurance segments can be rotated upside down for reuse.

Clearance between the reflective plates and beaters can be adjusted with the SCREW MECHANISMS (pos. 9). To prevent the destroying by non-crushing pieces of material screw mechanisms include DAMPING SYSTEM (pos. 8).

The rotor is rotate by the ELECTROMOTOR (pos. 12) with BELT MECHANISM (pos. 11) help. Belt mechanism defends the motor against breakage.

A few words about parameters.

The rotor has the diameter (D) at about 2000 mm. The length (L) of rotor is about 1500 mm. The rotation speed (frequency of rotation) (n) of the rotor is about 400 times per minute. The power (P) of motor is about 350 kW. The frequency of rotation of motor axe is from 1000 to 1500 times per minute. The gear ratio of belts lies in limits between 4 and 5.

Roller crusher

Roller crusher is designed (suitable) for grinding chalk, clay and other materials with high viscosity. Grinding is based on the compression of material between two rotating rollers. The typical crusher according to this concept consists of several elements. Let's describe them a little.

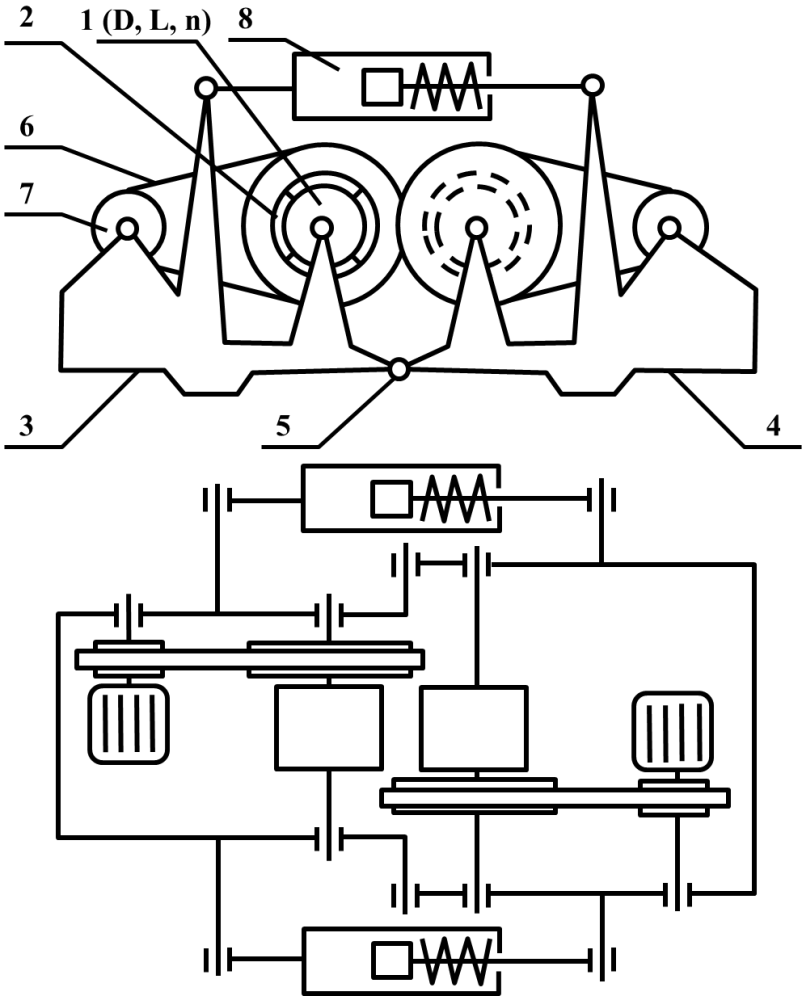

All the parts is mounted on two separated FRAMES (pos. 3, 4). Each frame includes ROLLER (pos. 1) covered by WEAR-RESISTANT SEGMENTS (pos.

2). The rollers is rotated by the ELECTROMOTOR (pos. 7) with BELT MECHANISM (pos. 6) help. Belt mechanism defends the motor against breakage. To prevent the destroying by non-crushing pieces of material both segments of frame connected to each other by HINGE (PIVOT, SWIVEL) (pos. 5). The rotation limits is defined by DAMPING SYSTEM (pos. 8).

Rollers may have a different type of surface. E. g., smooth, ridged or perforated. The type of surface depends on type of material and affects the start size of pieces of material. For ridged rollers this size may reach the value up to 0,5×D, for smoothed – only 0,05×D.

As a rule for smoothed rollers preliminary grinding is needed. The good is that smoothed rollers need to be cleaned not so often.

A few words about parameters.

The rollers may have the diameter 500 to 1500 mm. The length (L) of roller is defined by the equation 0,4…1×D. The rotation speed (frequency of rotation) (n) for ridged rollers reaches up to 500 times per minute. The rotation speed (frequency of rotation) for smooth rollers – up to 50 times per minute.

Ball mill

Such type of equipment as ball mill is used widely in cement industry for fine grinding of source materials and clinker.

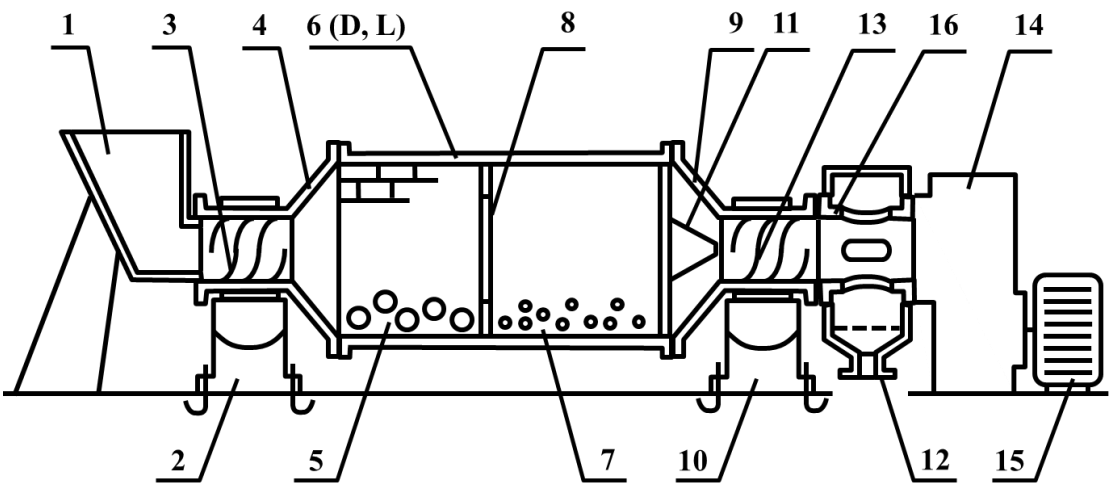

The main part of ball mill is a rotary TUBE (pos. 6) mounted on bearing SUPPORTS (pos. 2, 10). The tube has two covered BOTTOMS (pos. 4, 9) which are connected to base pins. The inner surface of each pin has a SCREW-FORM (pos. 3, 13). All internal surfaces of the drum and bottoms are protected by armour plates. The source material is offered to ball mill through the LOADING DEVICE (pos. 1). The tube is rotated by the ELECTROMOTOR (pos. 15) with help of special REDUCER (pos. 14) and hollow INTERMEDIATE SHAFT (pos. 16). The grinding of material is carried out by grinding bodies (balls and cylinders) loaded into one or more CHAMBERS of the mill (pos. 5, 7). During the tube rotation the milling bodies rise to a appropriate height and then affect the material by falling or rolling. Each chamber is loaded with milling bodies of a certain size. This allows setting the most suitable conditions for grinding. In the first chamber the grinding is mostly performed by kick, in second (and each next) chamber the abrasion is base of grinding process. The special PARTITION WALLS (pos. 8) are used for separating space of tube. A special CONICAL ELEMENT (pos. 11) is mounted on the last wall of the body to facilitate the exiting of material. The special UNLOADING DEVICE (POS. 12) can be mounted with the possibility of separation of ungrinded material and destroyed milling bodies. Usually the ratio between the tube diameter (D) and length (L) is 1 : 4..5. The size of the diameter is 1.5..4 m, length - 2.5..15 m. The frequency of rotation of the tube is 20..30 rpm. Performance is up to 15 t/h. Drive power is 500..3000 kW.

Practice

1. Select a variant of grinding equipment from the list:
    1) jaw crusher;
    2) cone crusher;
    3) pendulum mill;
    4) jet mill;
    5) vibratory mill;

6) hammer mill;
7) primary crusher;
8) roller mill;
9) wet pan mill.

2. Give characteristic of selected equipment:
   1) make constructive scheme;
   2) describe the principle of action;
   3) specify base technical parameters;
   4) highlight the advantages and disadvantages.
3. Make report according to previous actions.

Control questions

1. Specify the basic principles of material grinding.
2. Describe the principle of action of rotary crusher.
3. Try to draw the construction scheme of rotary crusher.
4. Define the list of basic parameters of rotary crusher.
5. Describe the principle of action of roller crusher.
6. Try to draw the construction scheme of roller crusher.
7. Define the list of basic parameters of roller crusher.
8. Describe the principle of action of ball mill.
9. Try to draw the construction scheme of ball mill.
10. Define the list of basic parameters of ball mill.

USEFUL LINKS

Grinding equipment

1. http://www.ohiointernationalfund.com/products/crusher/pew-jaw-crusher.html
2. http://www.westproequipment.com/p_jaw.htm
3. http://www.ohiointernationalfund.com/products/crusher/s-cone-crusher.html
4. http://www.westproequipment.com/p_cone.htm
5. http://www.verdes.com/en/docs/Verdes-disintegrators.pdf
6. http://www.verdes.com/en/docs/Verdes-primary-crushers.pdf
7. http://www.verdes.com/en/docs/Verdes-hammer-mills.pdf
8. http://www.verdes.com/en/docs/Verdes-pendulum-mills.pdf
9. http://www.verdes.com/en/docs/Verdes-wet-pan-mills.pdf
10. http://www.verdes.com/en/docs/Verdes-hinged-roller-mills.pdf
11. http://www.laxmiengineering.com/mineral-grinding-machine/4-roller-mill-plant/
12. http://www.clinicalupgrade.com/grinding-mill/vertical-roller-mill.html
13. http://www.ht-rent.net/product/grinding-mill/lum-vertical-roller-mill.html
14. https://hmicronpowder.com/applications/size-reduction/alpine-tfg-fluidized-bed-jet-mill